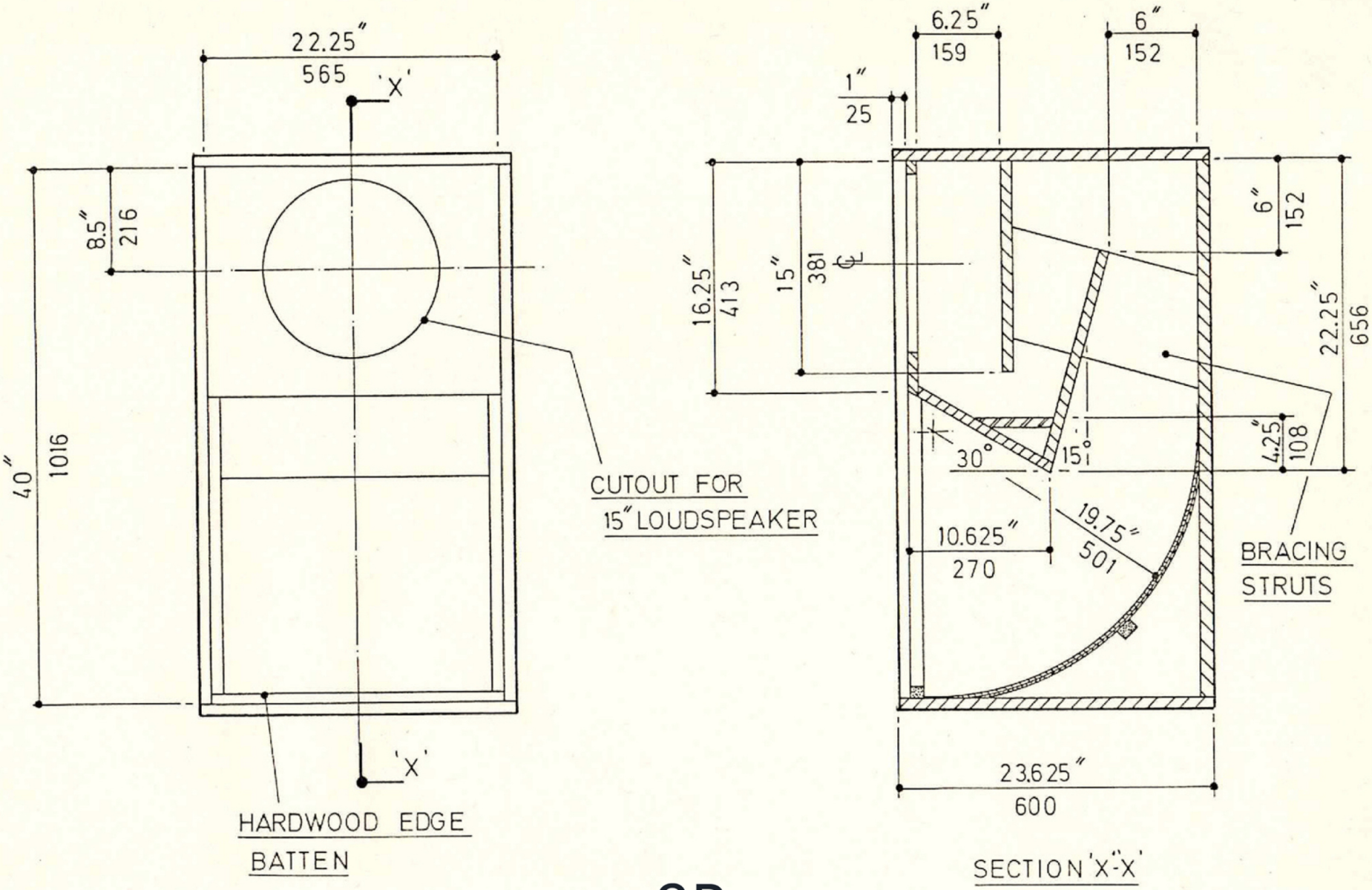
22.25"
565
'X'
8.5"
216
40"
1016
'X'
CUTOUT FOR
15" LOUDSPEAKER
HARDWOOD EDGE
BATTEN
6.25"
159
6"
152
1"
25
16.25"
413
15"
381
6"
152
22.25"
656
30°
15°
4.25"
108
19.75"
501
10.625"
270
BRACING
STRUTS
23.625"
600
SECTION 'X-X'

8B